PARIS BATH – 5’ 6” – WITH FEET

The Paris bath is a faithful reproduction of an early 20th Century French fireclay bath. The tub is made of Vitrite ™, a stone and mineral composite, which replicates the look and feel of the original bath but without the weight. It is available with or without feet, in two sizes and may be produced in any colour (prices may vary).

Length: 1665mm / 65.5”
Width: 822mm / 32.5”
Height: 695mm / 27”
Capacity: 300 litres / 63 UK gallons / 79 US Gallons
Dry weight: 80kg / 176lb

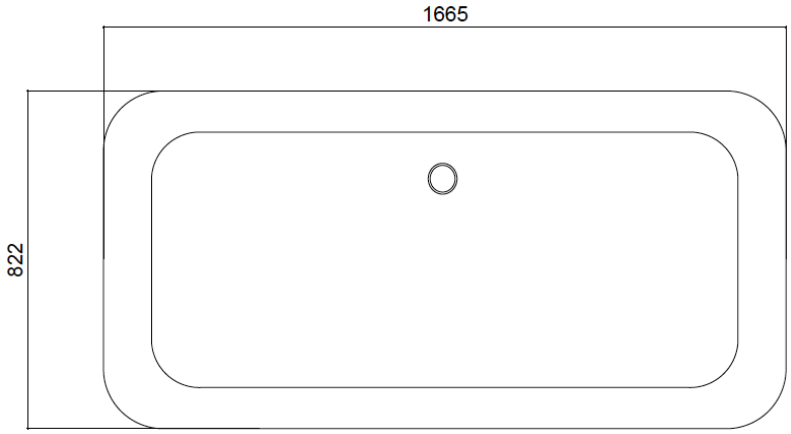

Paris Bath 5' 6" with Feet (dims in mm)	
O/A Length	1665
O/A Width	822
O/A Height	695
Int Length	1400 apr
Int Width	620 apr
Int Depth	520 apr

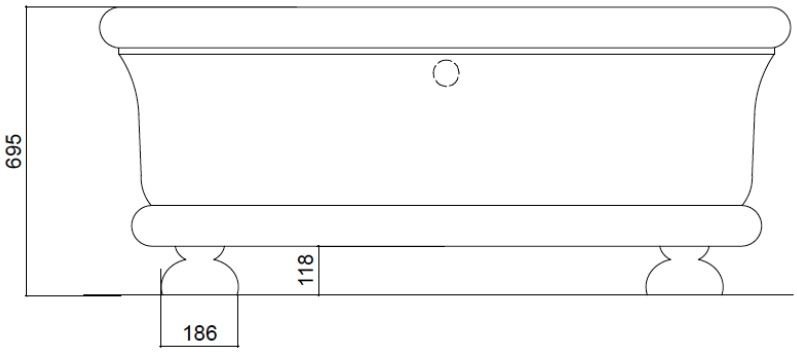

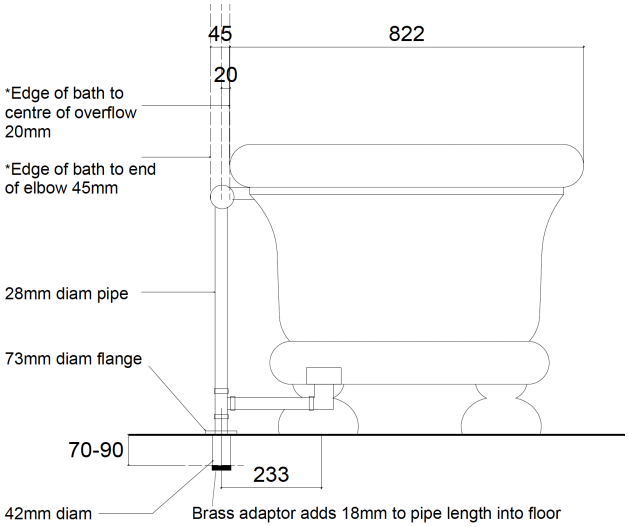

Waste: 1 1/2“ ; Overflow: 28mm into 42mm waste pipe - outlet is 1 1/2" BSP.
We only supply fittings above the floor. We do not supply the trap; the trap needs to go beneath the floor.
Dimensions are given in mm; they are a guide only and may vary from bath to bath.

THE WATER/ MONOPOLY
+44 (0)20 7624 2636 - thewatermonopoly.com

version 09.06 2021