PARIS LAVATORY PAN AND HIGH LEVEL CISTERN

The Paris lavatory pan is shown here with a high level cistern and white wooden seat. Other seat finishes are also available.
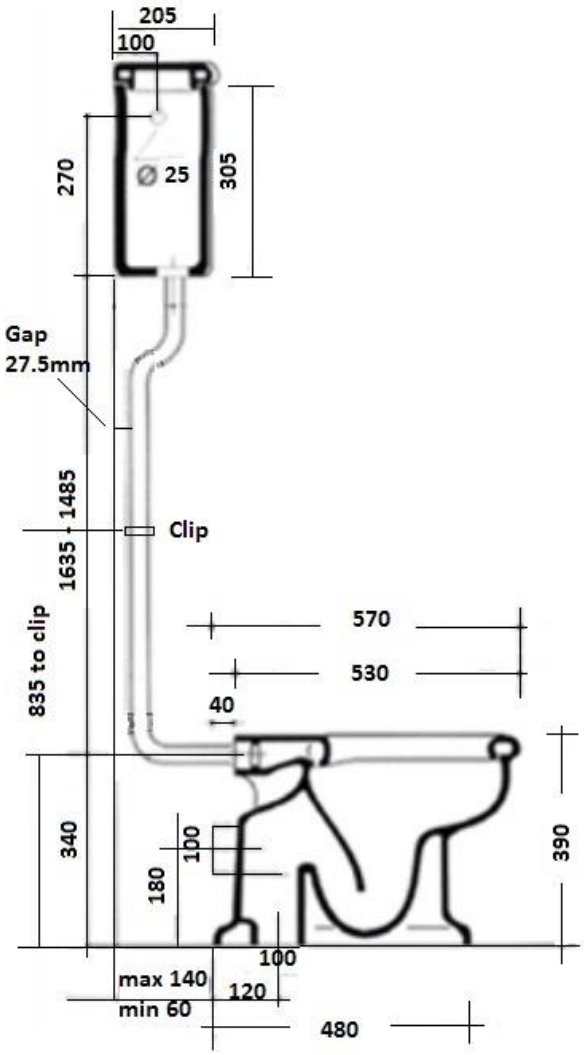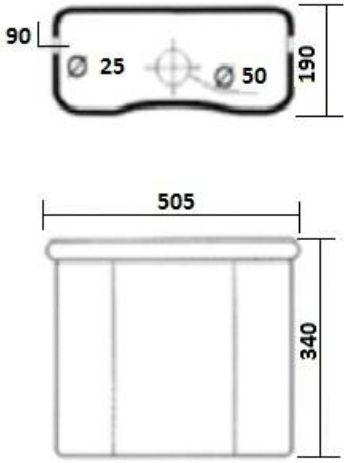
The pan is available with either a P trap or S trap.